Driving mechanisms for drilling in the early 2000s

The drilling of a borehole requires (1) turning the drill-bit at the bottom of the hole, so that the bit excavates more hole, and (2) letting the bit and long string of drilling pipe from which it hangs slip down into the newly excavated hole. This page illustrates three solutions, two in which power at the surface turns both pipe and drillbit, and a third in which the drillbit is turned independently at the bottom of the drillstring of pipe.

Kelly Bushing

In this mechanism, the drill string of pipe descending from the drilling floor to the bit hangs from a four-side or six-sided piece of pipe or hollow bar called the Kelly. The Kelly passes through the Kelly Bushing, a rotating bushing with a four-sided or six-sided central hole. The four-sided or six-sided nature of both that hole and the Kelly allows rotation of the Kelly Bushing to turn the Kelly and thus to turn the entire drill string. The central hole of the Kelly Bushing meanwhile lets the Kelly, and the entire drill string, slip downward as the drill bit advances into the Earth.

This was the mechanism used on almost all petroleum drilling rigs in the 1900s, and the elevation of the Kelly Bushing was almost always the datum for well log depths. Rigs built in the 2000s have instead been fitted with Top Drive, but many rigs using the Kelly Bushing remain in operation, especially in onshore drilling.

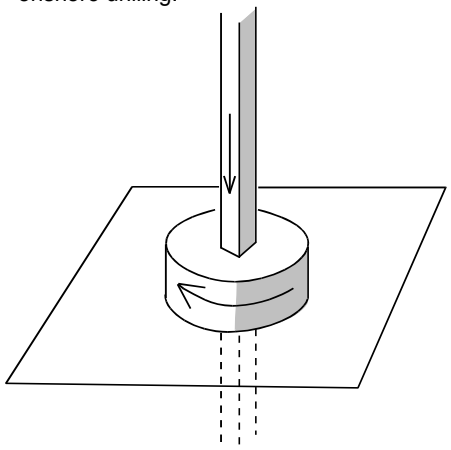

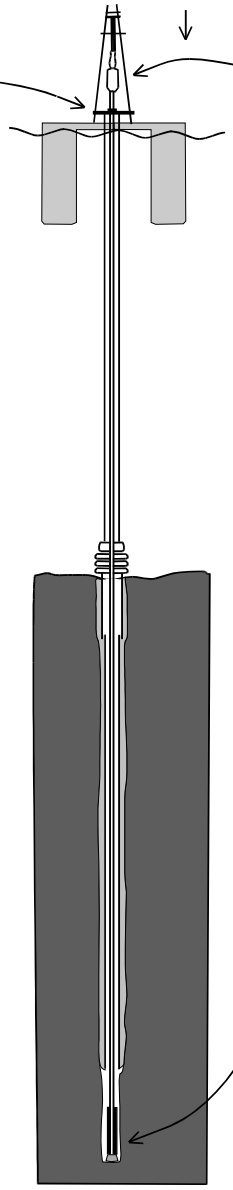

Topdrive or Top Drive

In this mechanism, the drill string of pipe descending from the drilling floor to the bit hangs directly from a large motor called the "Topdrive". The motor, an electric or hydraulic device, hangs above the drilling floor from the hoist, and thus it can be lowered as the drillbit progresses into the Earth.

In this mechanism, the Kelly Bushing and Kelly are no longer needed, allowing faster addition of new pipe to the drill string as drilling progresses. Addition of 90-foot stands of pipe, rather than 30' stands, also lessens the chances of sticking the drill string during stops to add pipe.

This mechanism was introduced in the 1990s. It was soon widely used offshore, but older rigs using the Kelly Bushing remain in operation, especially in onshore drilling.

Mud motor

A mud motor is a device in the bottom-hole of assembly of the drill string, just above the drill bit. The passage of drilling mud through this device turns the motor, and the rotation of the motor is transferred downward to turn the bit. This mechanism is useful for directional drilling, in that the bottom-hole assembly can be turned to a new direction independent of the drillstring above.

Sources: Schlumberger *Oilfield Glossary*; Rigzone's *How it Works*.